QuickSet®

Product Naming System

QuickSet Taper 305 / 00

Taper – Cladding Type
305 – Height (mm)
00 – Base Insulation Thickness (mm)

In the naming system, the cladding type refers to the type of QuickSet system:

- **Taper** is for standard cladding;
- **Ultra** is for standard cladding but features an insulated top cap for 140mm framing and above;
- **Rebate** is for brick cladding.

The height value refers to the height of the formwork.

The final values after the slash denote the base insulation thickness, where 00 denotes no base insulation.

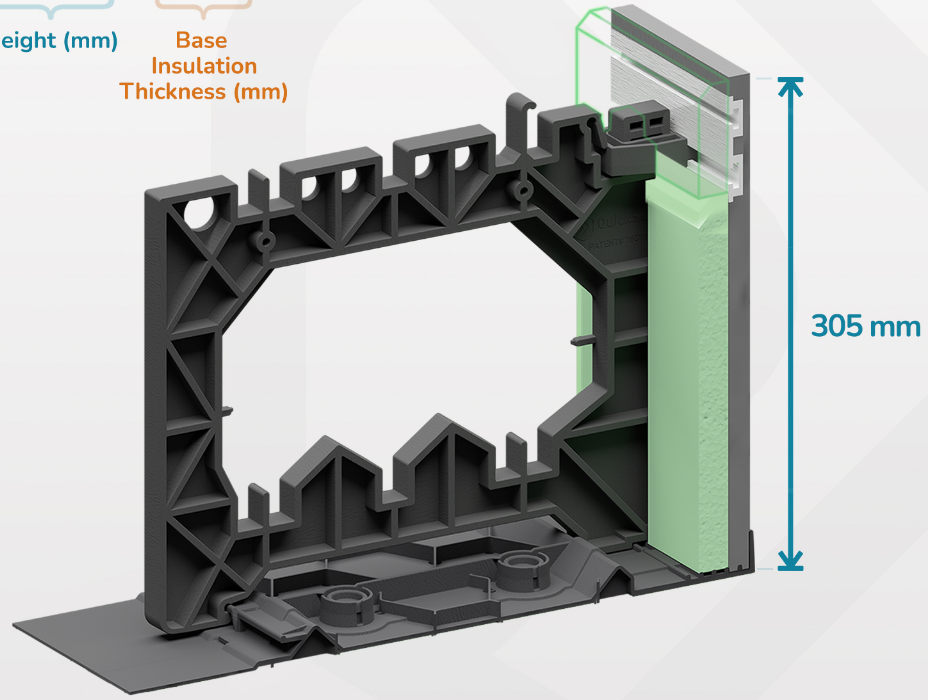

QuickSet Rebate 120 / 305 / 50

Rebate – Cladding Type
120 – Rebate Size (mm)
305 – Height (mm)
50 – Base Insulation Thickness (mm)

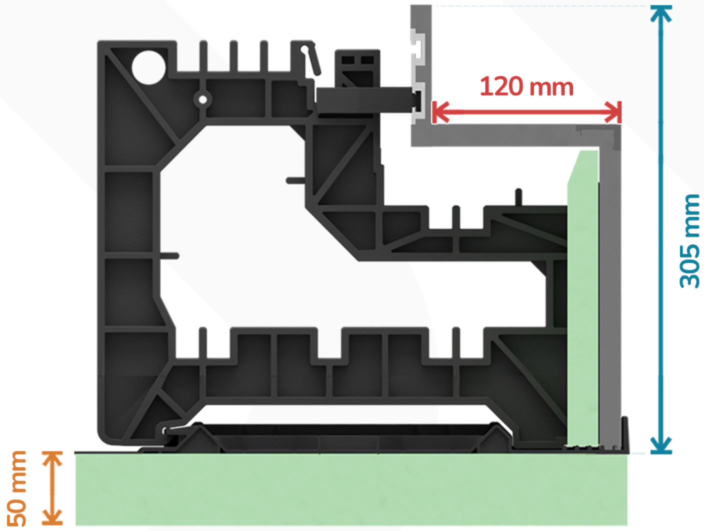

QuickSet Ultra 305 / 25

Ultra – Cladding Type
305 – Height (mm)
25 – Base Insulation Thickness (mm)

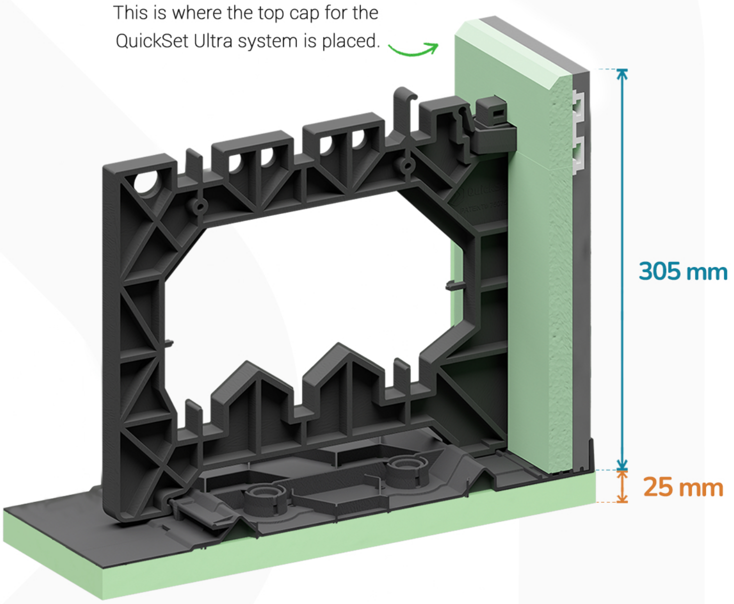This is where the top cap for the QuickSet Ultra system is placed.